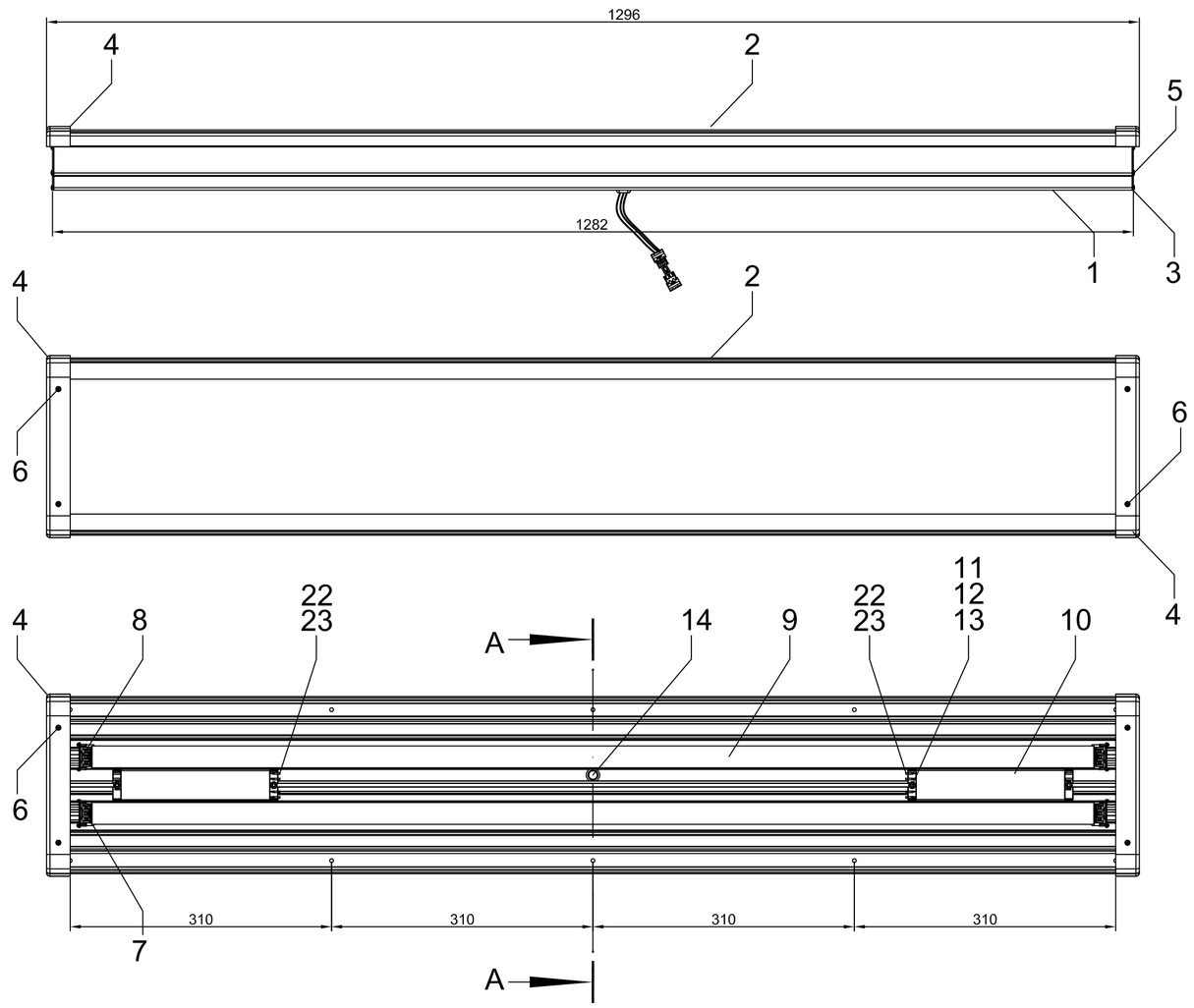

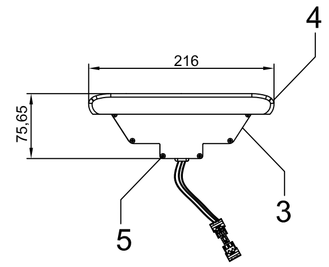

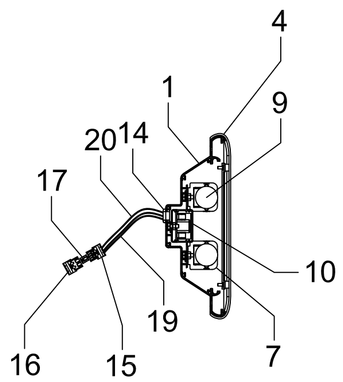

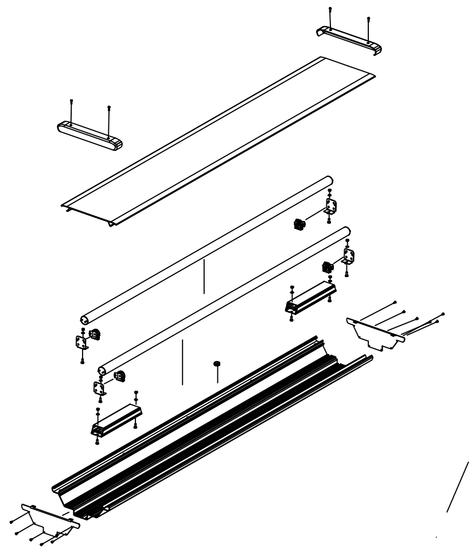

Armature Profile
1 : 5 (1)

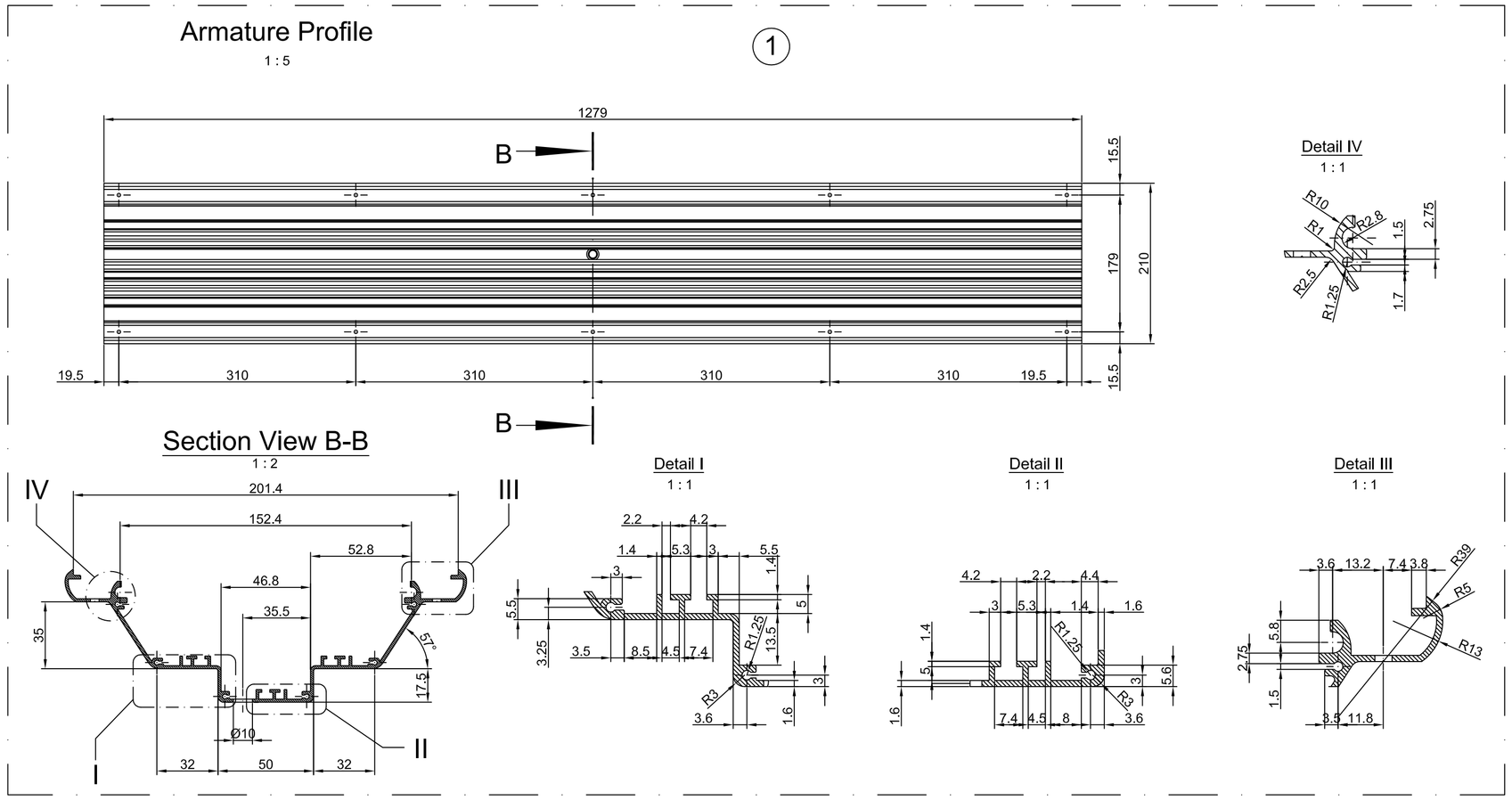

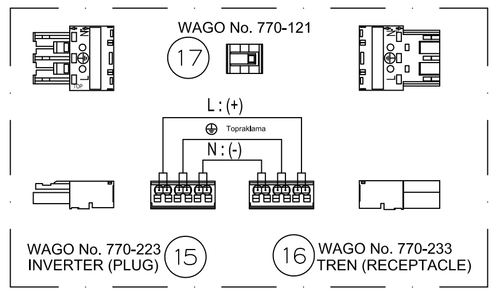

CONNECTOR DIAGRAM

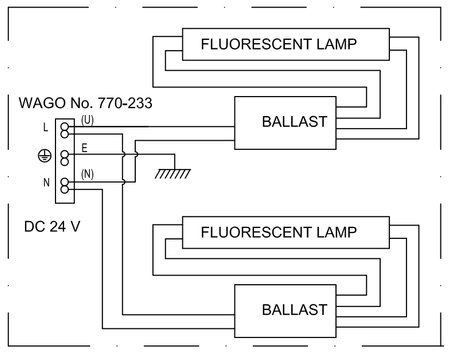

CONNECTING DIAGRAM

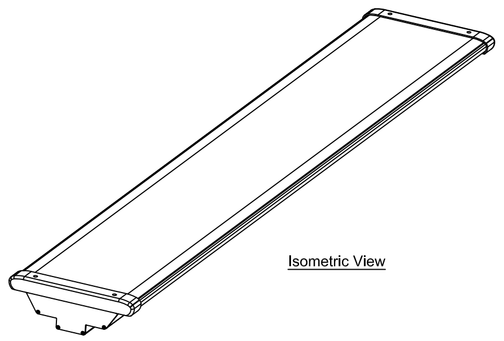

Isometric View

Section View D-D
1 : 1 (6)

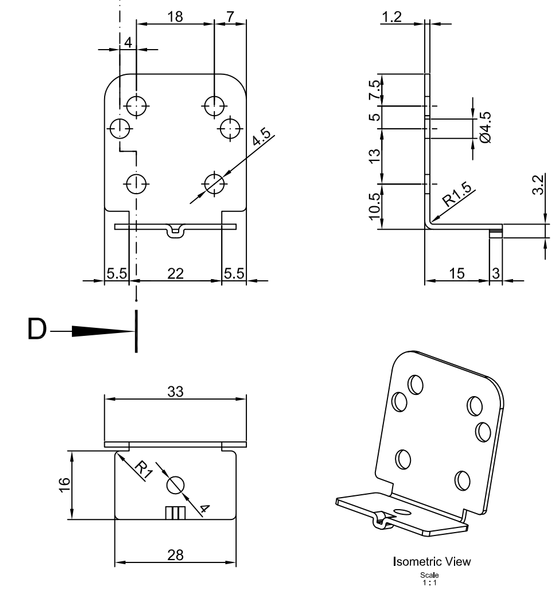

Isometric View
Scale 1 : 1

Cap
3 — 1 : 2

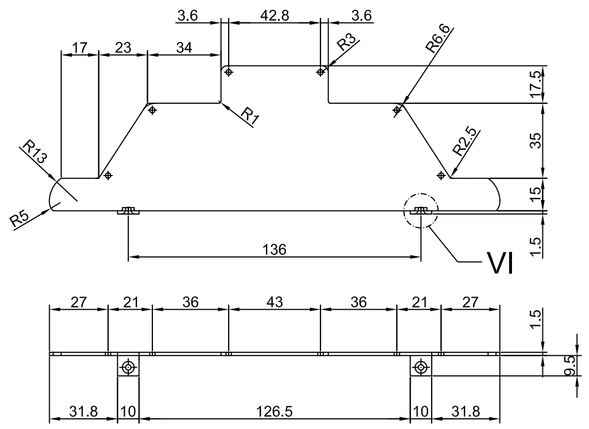

Detail VI
1 : 1

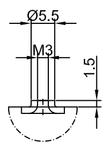

Glop
2 — 1 : 5

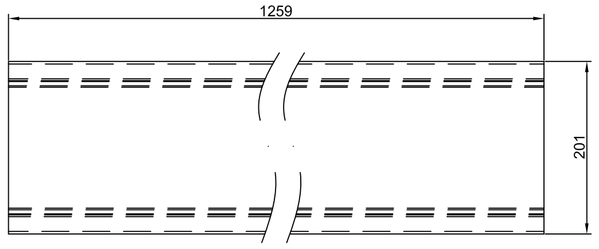

1 : 1

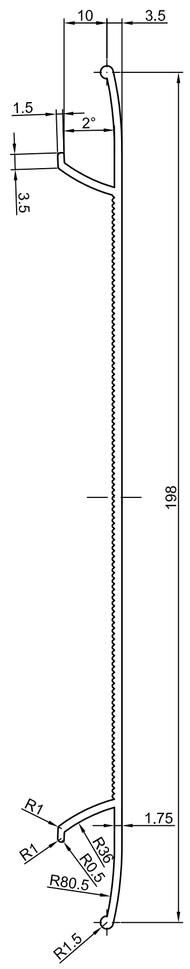

Plastic Cap
1 : 2 (4)

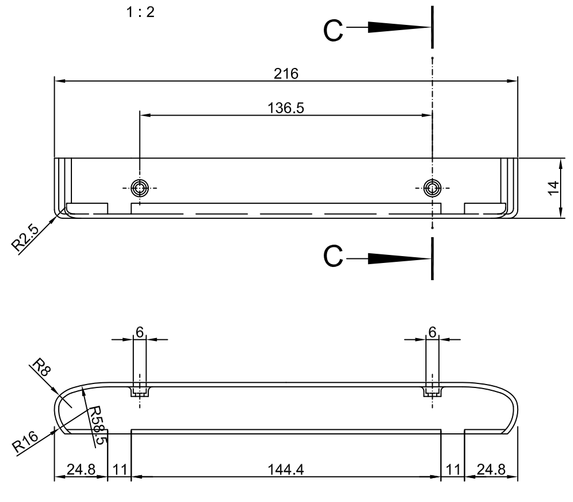

Detail V
1 : 1

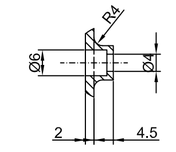

NOTE.
1. To be painted according to the specification REDD101288

GIVEN QUANTITIES ARE FOR A SINGLE ASSEMBLY.

Item No	Designation Name of Item	Qty.	Standard Code Identification No	Material	Dimension	Weight (Kg)
23	Single Plug Connector	6	MESA / Muadil Ürün	KK3406		
22	Terminal	6	MESA / Muadil Ürün	TD2114		
21	Cable(Yellow-Green)	1	TSHD.21.15.S1	H07Z1-K	1x0.75x500	
20	Cable (Black)	1	TSHD.21.15.S1	H07Z1-K	1x0.75x500	
19	Cable (Red)	1	TSHD.21.15.S1	H07Z1-K	1x0.75x500	
18	Cable (White)	1	TSHD.21.15.S1	H07Z1-K	1x0.75x5800	
17	Locking Connector	1	WAGO	770-121		
16	Male Connector	1	WAGO	770-233		
15	Female Connector	1	WAGO	770-223		
14	Rubber Bussing	1	Çağdaş Conta/Muadil	KG-10/Muadil		
13	Nut	8	EN ISO 4032	8.8	A4.3	
12	Lock Washer	8	DIN 6798	St.	A4.3	
11	Hexagon Head Screw	8	EN ISO 4017	8.8	M4x10	
10	Ballast	2		24VDC 36W	25x38x196	
9	Fluorescent Lamp	2	Philips / General Osram / Tekfen	6200K-6500K	36W	
8	Fluorescent Lamp Socket	4	A.A.G./Stucchi	1345MAU		
7	Support	4	EN 10088	X5.CrNi.18-10	1.2x33x52.5	
6	Fillester Head Screw(Cylinder Shaped Head)	4	EN ISO 7045	8.8	M3x10	
5	Fillester Head Countersunk Screw	12	DIN 7982	8.8	2,9x6,5	
4	Plastic Cap	2		ABS	24x28x216	
3	Cap	2		Al.Mg.Si. 0.5	1.5x79x210	
2	Glop	1		Polycarbonate	15x201x1259	
1	Armature Profile	1	EN 13981	Al.Mg.Si. 0.5	70x210x1279	

	Nom. Size	Class
TS 12708 Steel Casting	<1000	6,0 / 0,8
	<630	4,0 / 0,7
	<400	3,0 / 0,6
	<250	3,0 / 0,4
	100	2,0 / 0,3
	40	1,5 / 0,2
	L mm	Ham / İşL

	Nom. Size	Class
ISO 2768 General Tolerances	<4000	2,0 / 0,4
	<2000	1,2 / 0,4
	<1000	0,8 / 0,3
	<400	0,5 / 0,3
	30-120	0,3 / 0,2
	2-30	0,2 / 0,1
	L mm	m ± / K ±

	Nom. Size	Class
ISO 13920 Welded Construction	>20000	9,0 / 8,0
	<20000	8,0 / 7,0
	<16000	7,0 / 6,0
	<12000	6,0 / 5,0
	<8000	5,0 / 4,0
	<4000	4,0 / 3,0
	<2000	3,0 / 2,0
	<1000	2,0 / 1,5
	<400	1,0 / 1,0
	30-120	1,0 / 0,5
	2-30	1,0 / 0,5
	L mm	A ± / E ±

ISO 1302	ISO 8015	EN 22553	General Tol.	ISO 2768 f☐ m☐ H☐ K☐	
EN 15085-2 Certification Level		CL1☐ CL2☐ CL3☐ CL4☐	Weld Pro.	ISO 13920 A☐ B☐ E☐ F☐	
			Cast Steel	ISO 12708 Lm2☐ Lr2☐ Sm2☐ Sr2☐	
Approved	M. KARAKADI		Scale		
Checked	F.ARSLAN		1:5 1:2 1:1		
Prepared	Y.ERCAN				

TYP

CAB FLUORESCENT LIGHT ASS'Y (DC 24V 36Wx2)

TÜVASAS
Turkish Wagon Industry

REL20001AN0

Technical Specifications					
Technical Document					
Fixture/Mould Asset ID.					
Coating/Heat Tre./Roughness					
Paint/Color	Modf. No	Modification Description	Date	Sign	

Date: | Parts List No: | Sheet: 1/1 | Size:A1 | Rev:00

Reproduction, dissemination or use of this document or its all contents in any form without the prior written permission of TÜVASAS, is prohibited. Offenders will be liable for the payment of damages. All rights reserved in the event of the grant of a patent, utility model or design registration.